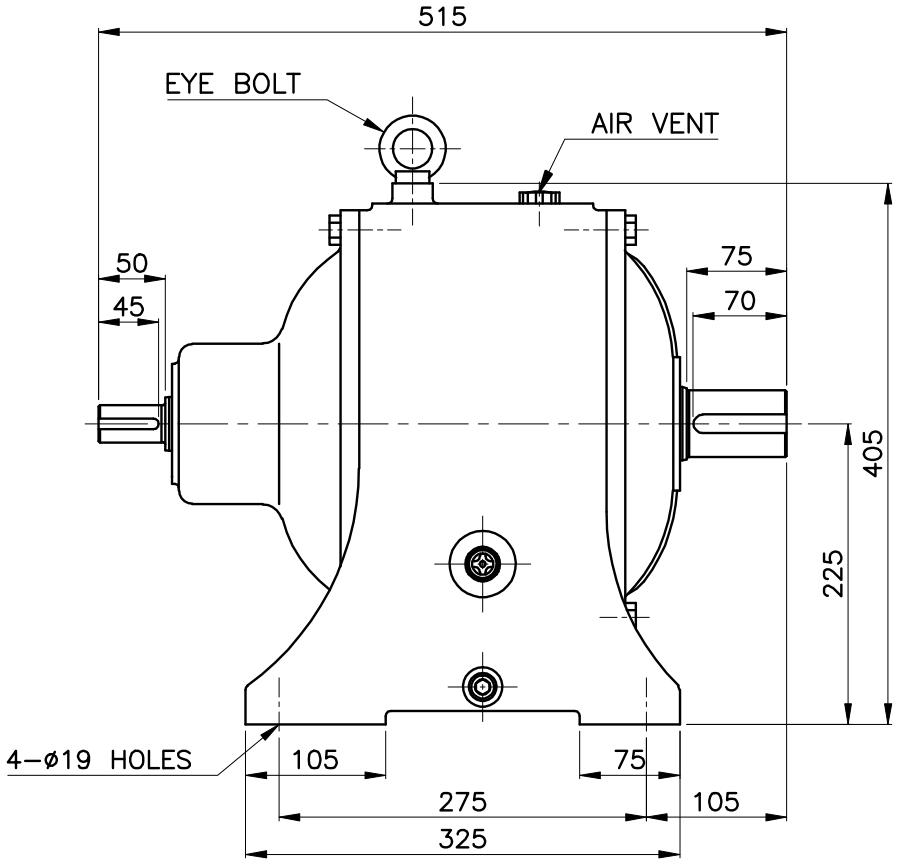

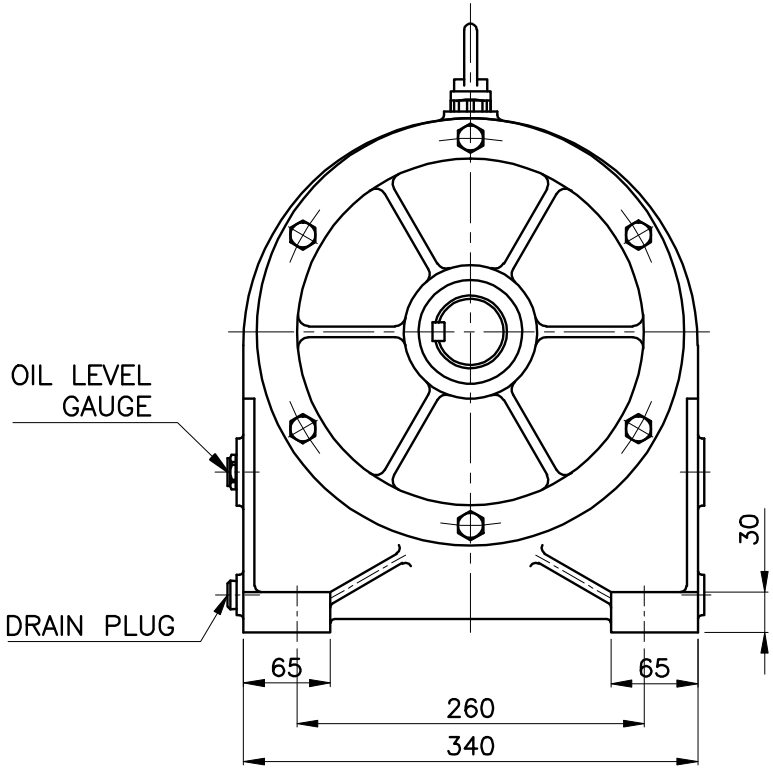

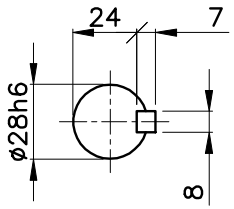

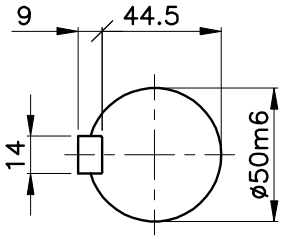

Ø28h6	0 / -0.013	TOLERANCES UNLESS OTHERWISE SPECIFIED		ROUGHNESS		-	EXTERNAL FORM		-	-		
Ø50m6	+0.025 / +0.009	DIMENSION mm	TOL mm	SYMBOLS	Rmax 0.001 mm	NO.	DESCRIPITIONS	SIZE	MAT'L	Q'TY	WEIGHT (kg)	REMARKS
		1OVER4UNDER	±0.1			CUSTO-MER	-	DRAWN	DESIGNED	CHECKED		APPROVED
		4" 16"	±0.2					K.Y.M		J.R.H		
		16" 63"	±0.3	▽▽▽▽	0.8S	PART NAME	2.2KW 6P 1/21~1/30					
		63" 125"	±0.4				JK-LT 2110 REDUCER	DATE	2007.10.11			
		125" 250"	±0.5	▽▽▽	6.3S			DWG.NO.	3H6P30-L2110			
		250" 500"	±0.6									
		500" 1000"	±0.8	▽▽	12.5S	SCALE	1 / 1	PROJEC-TION	REL.NO.			
		1000" 2000"	±1.0									
		2000" 4000"	±1.5	▽	50S		JEIL ENGINEERING & INDUSTRIAL CO., LTD.					
		ANGLE	±0.5									