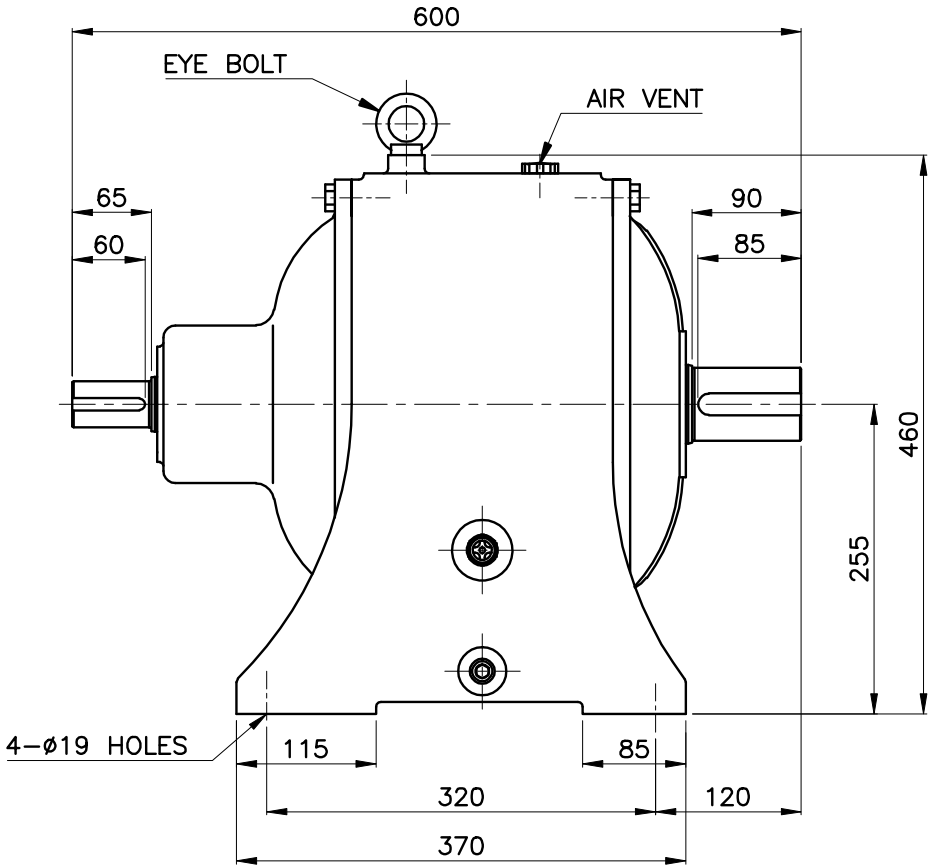

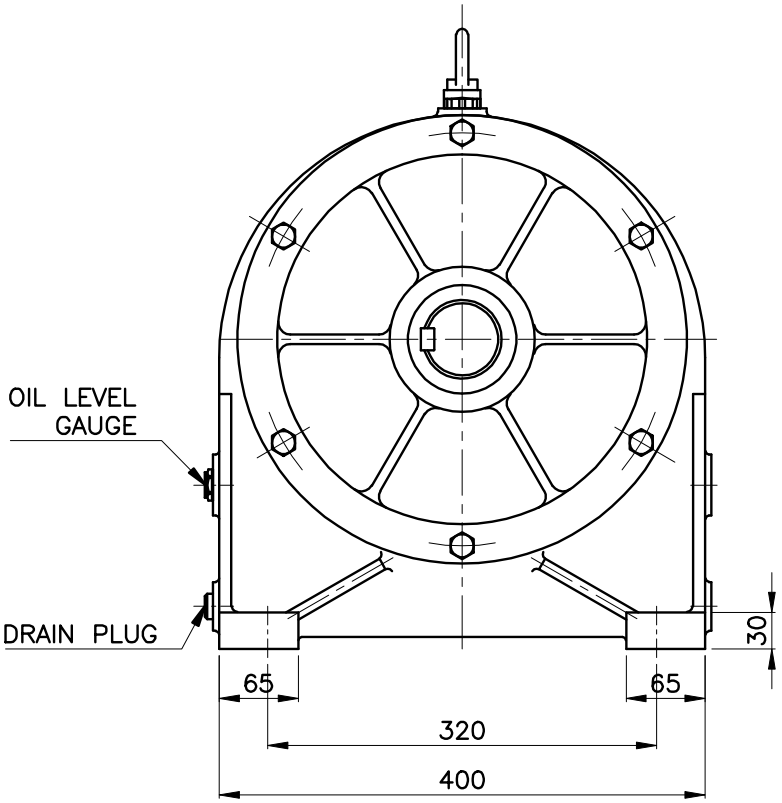

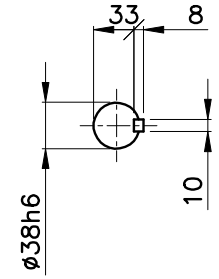

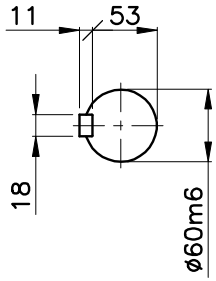

Ø38h6	0 / -0.016	TOLERANCES UNLESS OTHERWISE SPECIFIED		ROUGHNESS		-	EXTERNAL FORM		-	-		
Ø60m6	+0.030 / +0.011	DIMENSION mm	TOL mm	SYMBOLS	Rmax 0.001 mm	NO.	DESCRIPITIONS	SIZE	MAT'L	Q'TY	WEIGHT (kg)	REMARKS
		1OVER4UNDER	±0.1			CUSTO-MER	-	DRAWN	DESIGNED	CHECKED	APPROVED	
		4" 16"	±0.2					K.Y.M		J.R.H		
		16" 63"	±0.3	▽▽▽▽	0.8S	PART NAME	7.5KW 4P 1/5~1/20	DATE	2007.10.11			
		63" 125"	±0.4				JK-LT 2125 REDUCER	DWG.NO.	10H4P20-L2125			
		125" 250"	±0.5	▽▽▽	6.3S							
		250" 500"	±0.6									
		500" 1000"	±0.8	▽▽	12.5S	SCALE	1 / 1 PROJEC-TION	REL.NO.				
		1000" 2000"	±1.0									
		2000" 4000"	±1.5	▽	50S		JEIL ENGINEERING & INDUSTRIAL CO., LTD.					
		ANGLE	±0.5									